Constructor University Bremen

Natural Science Laboratory Communications

Fall Semester 2025

Lab Experiment 1

Author of the report Mr. Nikoloz Burduli

Date of execution : October 27, 2025

1. Abstract

The main objective of this lab is to understand how a basic single-link communication system functions. Using Simulink, the lab focuses on simulating the transmitter to explore its structure, key components, and overall operation. Through both theoretical study and practical simulation, the experiment aims to provide a clear understanding of bit-to-symbol mapping, constellation diagrams, pulse shaping filters, and up-conversion techniques involved in the transmission process.

2. Introduction

A transmitter is an essential part of any communication system, responsible for converting input signals into a form that can be efficiently transmitted over a channel. It performs several key functions, including modulation, filtering, amplification, and coupling of the modulated signal to the transmission medium.

In this lab, the focus is on understanding how the transmitter operates and the purpose of each of its components. Specifically, the transmitter takes a binary input stream and processes it into a suitable waveform for transmission through a physical channel. The fundamental building blocks of the transmitter are studied using phasor domain (complex baseband) processing to simplify the analysis and better understand the underlying principles of signal transmission.

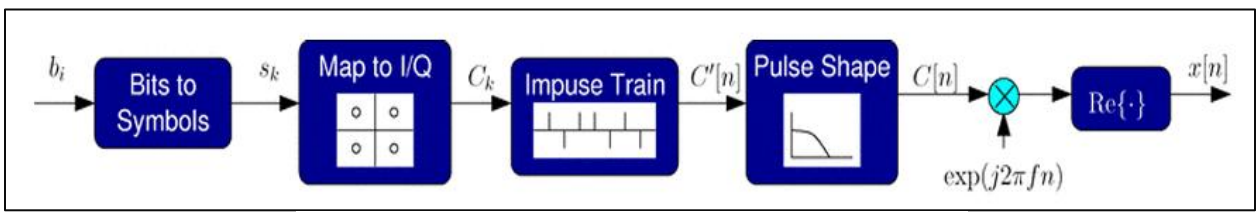

Figure 1. The Structure of the Transmitter

3. Execution

3.1 Experiment 1 – Starting Simple

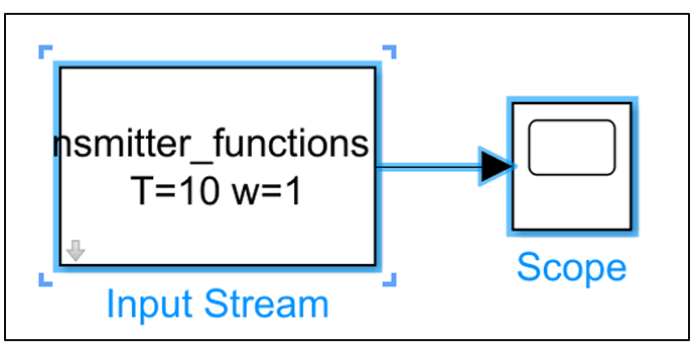

Figure 2. System for the Starting Simple

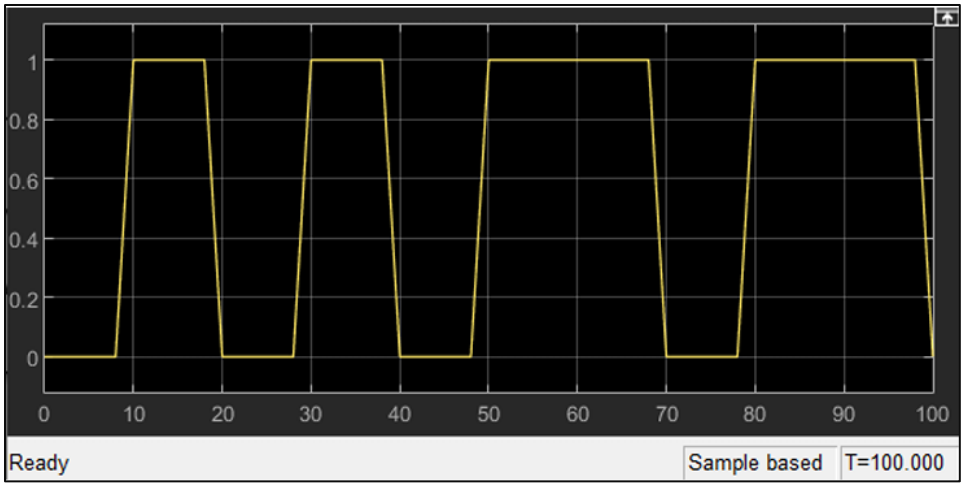

Figure 2. The result for the Starting Simple

3.2 Experiment 2 – BPSK Symbols

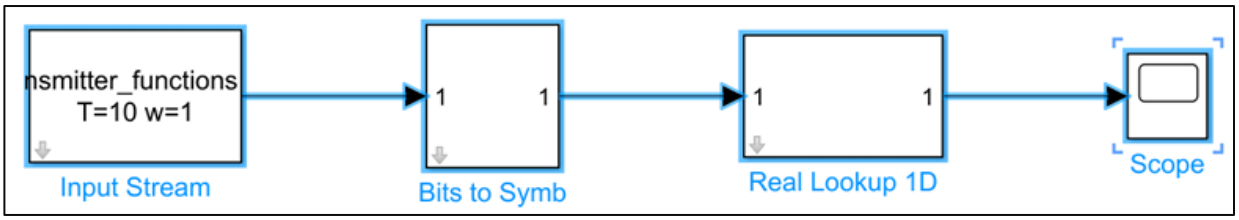

Figure 3. The System for the BPSK

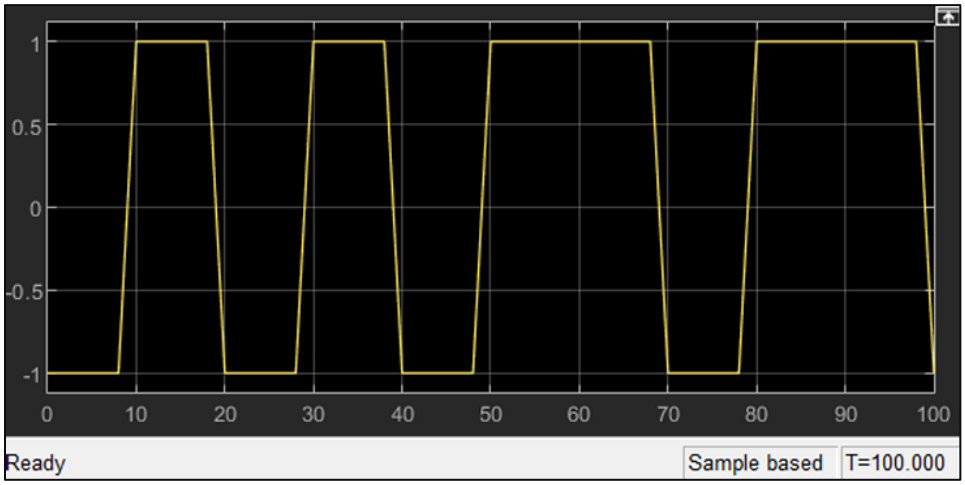

Figure 4. The Result for the BPSK

3.3 Experiment 3 – Rectangular Pulses and PSD

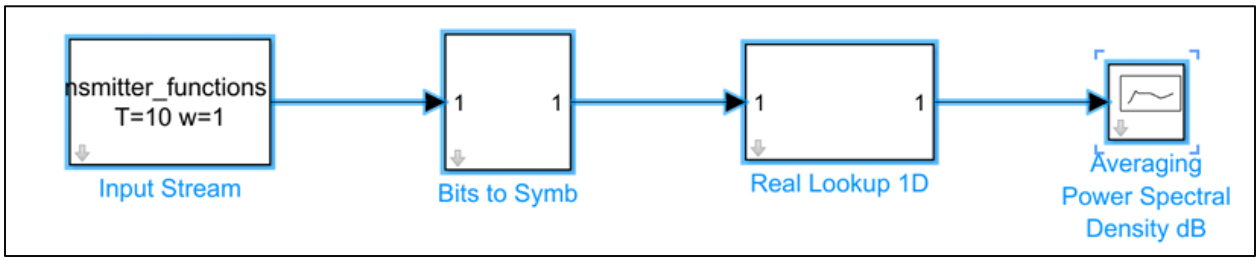

Figure 5. The System Pulses and PSD

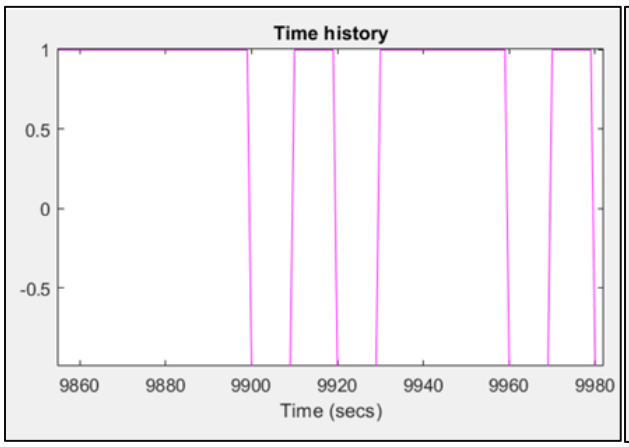

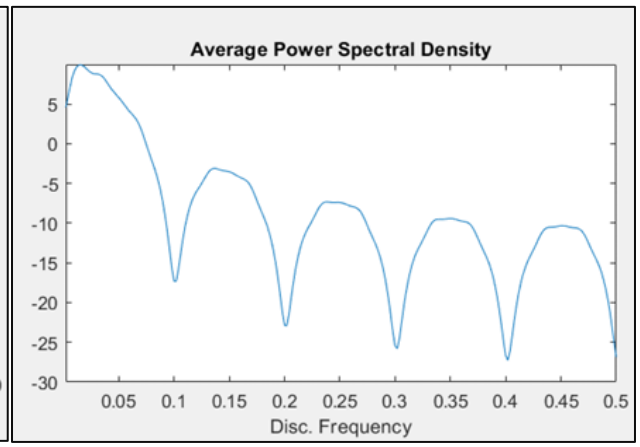

Figure 6. Rectangular Pulses

Figure 7. Average Power Spectral Density

3.4 Experiment 4 – Spectrally – Efficient Pulse Shaping

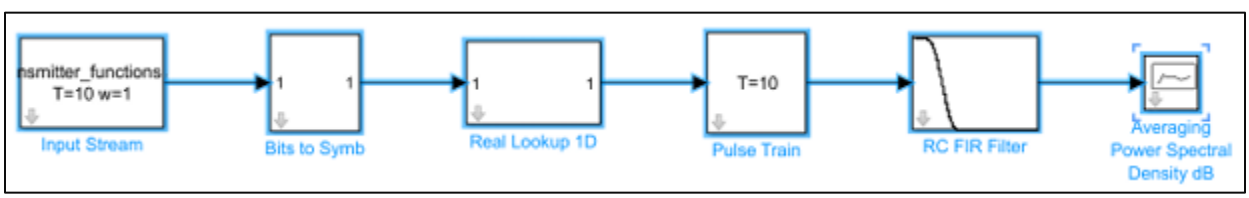

Figure 8. The System for Efficient Pulse

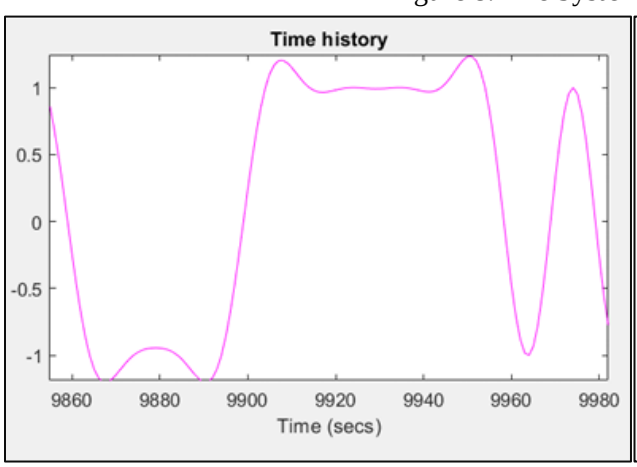

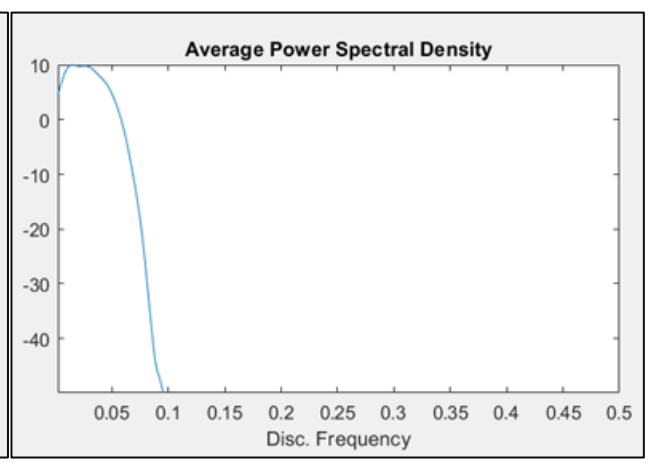

3.5 Experiment 5 – QPSK Transmitter

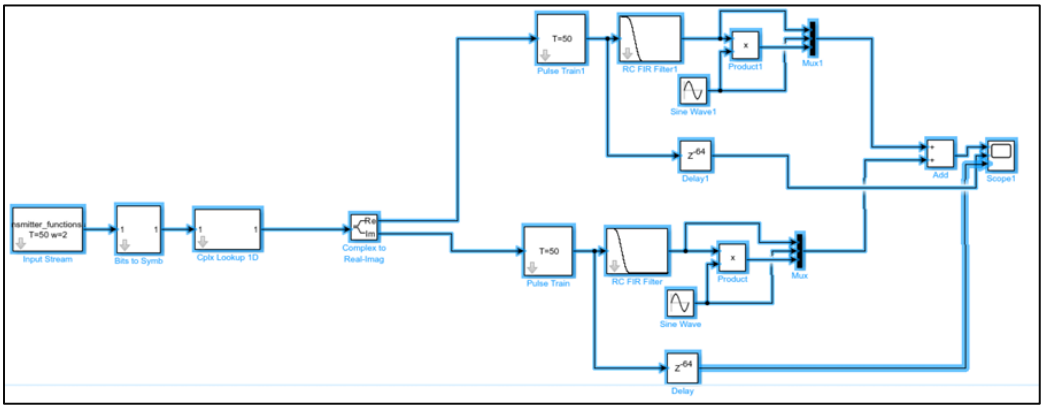

Figure 9. The System for The QPSK Transmitter

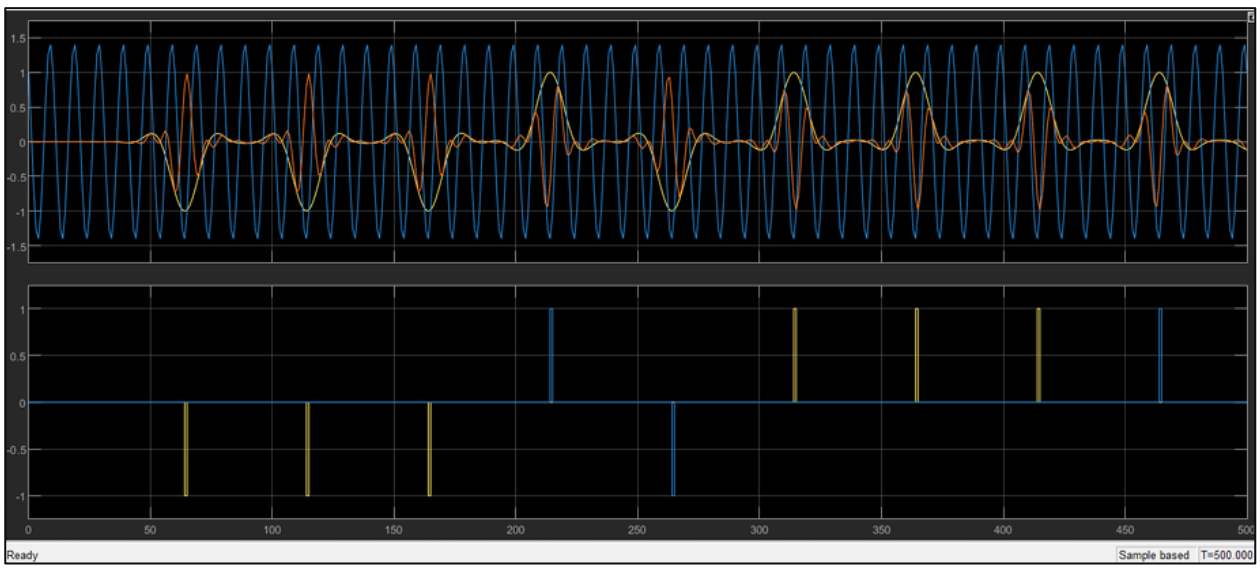

Figure 10. The result for QPSK Transmitter

4. Evaluation

- Explain in one or two paragraphs what you learned about communications systems that you didn't know before.

A transmitter is used to process and prepare information so that it can be effectively sent over a communication channel. There are several techniques available for transmitting signals, each with its own characteristics and applications. In this experiment, two such modulation methods were explored Binary Phase Shift Keying (BPSK) and Quadrature Phase Shift Keying (QPSK). Through a combination of practical observations and theoretical analysis, the

differences between these two techniques were identified and discussed, providing a deeper understanding of how digital information can be represented and transmitted using phase modulation.

BPSK is a binary modulation method where each symbol represents one bit — either 0 or 1 and it uses two phase shifts (0° and 180°). Because each symbol carries only one bit, BPSK is less bandwidth-efficient compared to QPSK. However, it offers better accuracy and noise resistance due to the larger distance between its two-phase states. On the other hand, QPSK is a quadrature modulation technique where each symbol represents two bits (00, 01, 10, or 11) with four phase shifts (0°, 90°, 180°, and 270°). This allows QPSK to transmit twice as much data in the same bandwidth, improving efficiency, though it becomes more sensitive to noise since the phase states are closer together. Overall, I learned how these trade-offs influence the choice of modulation in communication systems, depending on whether bandwidth efficiency or signal robustness is prioritized.

- Show a picture of your final QPSK transmitter. Explain briefly what the different blocks are for. Explain how you checked that it was working correctly. A plot of the output showing important signals would be very helpful.

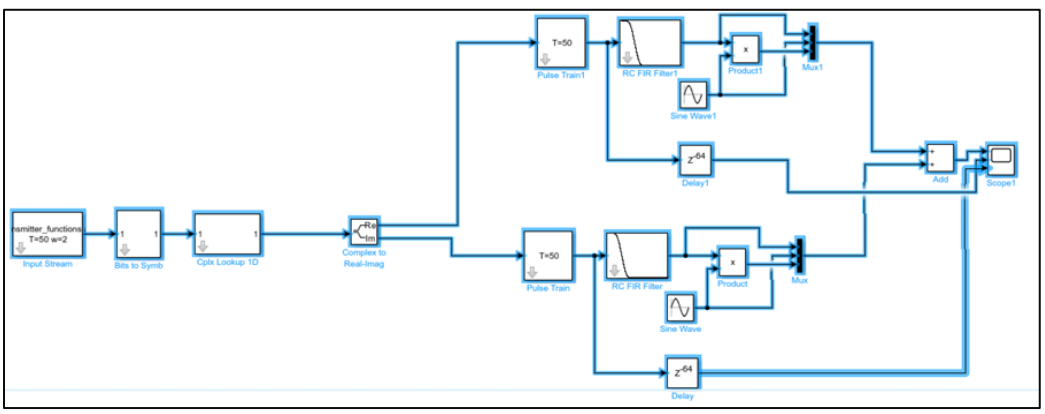

Figure 9. The System for The QPSK Transmitter

1. The Input Stream block produces the initial binary data that will be transmitted.

2. The Bits to Symbol block groups the input bits into pairs and converts them into symbols.

3. The Complex Lookup 1D block maps these symbols onto specific complex values in the baseband constellation.

4. The Complex to Real-Image block separates the complex signal into its in-phase (I) and quadrature (Q) components.

5. Two Pulse Train blocks generate impulse trains to represent these components as pulse sequences.

6. The Raised Cosine FIR Filter blocks shape and smooth the pulses to reduce intersymbol interference and prepare the signal for transmission.

7. Delay blocks are added to align the I and Q signals, ensuring proper synchronization between them.

8. Two Sine Wave blocks create the carrier waves a cosine for the I component and a sine (shifted by 90°) for the Q component.

9. The Product blocks multiply the I and Q components with their respective carrier signals.

10. A Mux block combines the modulated I and Q signals into a single vector signal.

11. The Add block sums the two modulated components to form the final QPSK signal ready for transmission.

12. Finally, the Scope block visualizes the signals, allowing observation of waveform behavior and phase transitions.

To verify that the transmitter worked correctly, the output was observed on the scope. The I/Q constellation diagram displayed four distinct phase points, confirming correct symbol mapping for QPSK. In the output plot, the blue waveform represented the carrier (pure sine wave), while the orange waveform showed the modulated QPSK signal, where a 90° phase shift occurred each time the input symbol changed clearly demonstrating proper operation of the QPSK transmitter.

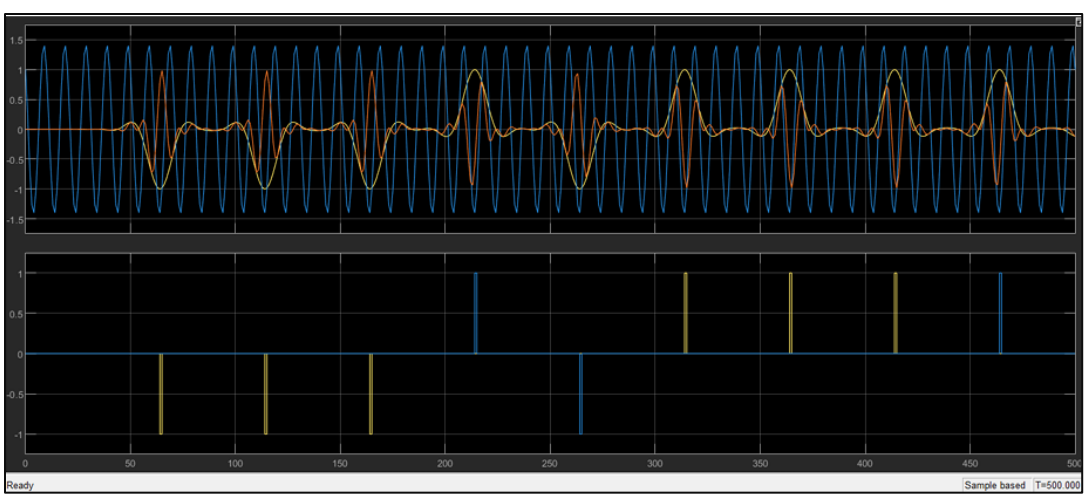

Figure 10. The result for QPSK Transmitter

- Explain why we do pulse-shaping in communications systems, rather than just sending rectangular pulses.

Although a wider bandwidth may seem advantageous because it can carry and transmit a larger amount of information, in reality, it is not always practical. A broader bandwidth allows more room for noise interference and also requires higher power to operate. In most communication systems, it is preferable to limit the bandwidth so that only the essential frequency components are retained while the unnecessary higher frequencies are filtered out.

To accomplish this, a pulse shaping technique is applied. In this method, pulses are generated and the input stream values are mapped onto these pulses with a specific shape, helping to smooth the transitions in the signal. As a result, the frequency spectrum avoids the unwanted sinc-type behavior, and the overall bandwidth of the transmitted signal is effectively reduced.

- Tell why synchronization (e.g. sampling the received signal at the right place) is critical in a communications system that uses pulse shaping.

To make sure the transmitted information can be recovered with as little loss as possible, the signal needs to be sampled at consistent time intervals. This helps avoid any timing misalignment and ensures the signal can be correctly decoded. This process is known as synchronization. If synchronization is not done properly or is completely skipped, it can lead to signal distortion and errors during data recovery.

- Describe any difficulties you experienced in getting your design to work and how you fixed these problems.

While setting up the QPSK transmitter, I ran into a couple of issues before everything started working correctly. At first, I forgot to update the Complex Lookup 1D table values to *(1, j, -1, -j)*. Because of that, the mapping of symbols in the constellation was incorrect, and the output didn't show the expected four phase points. After checking the block parameters more carefully, I realized the mistake, corrected the lookup table, and the modulation began to work as intended.

Another problem happened when I accidentally connected the wire after the RC Filter instead of at the correct point in the circuit. This caused the output graphs to look strange and not match the expected QPSK waveform. Once I noticed this incorrect connection and fixed the wiring, the output signals looked right, and the transmitter behaved as expected.

5. Conclusion

Throughout this lab, the structure and operation of a transmitter were examined in detail, along with the study of different digital modulation techniques such as BPSK and QPSK. The experiments and simulations helped in understanding how information is prepared, modulated, and transmitted through a communication channel. The importance of pulse shaping in controlling

bandwidth and reducing interference, as well as synchronization for accurate signal recovery, was clearly observed.

By performing simulations in Simulink, it became easier to visualize how each block contributes to the transmission process and how small configuration mistakes can affect the output. Overall, this lab provided a strong practical understanding of how theoretical concepts in digital communication are applied in real systems, improving both technical knowledge and problem-solving skills related to signal transmission and modulation.